Wee Bee

Chronology

San Diego, CA

1982

5/15/94

Hi Bill, CHANA

Your talk last evening on the WeeBee and the other Bees was, as always, very very good and most enjoyable to everyone and especially to me. It really brought to life all those experiences that we, as young folk, had the energy to undertake.

You asked about the accuracy of the statements on the origin of the WeeBee. Just for the record, here are the facts: Not long before the end of the war in 1945, I conceived the idea of the airplane while working as a Flight Test Engineer at Boeing. I had been a model builder, and the idea of using balsa wood was attractive. I remember going for a walk around the plant one noon hour, and the thought of building the world's smallest airplane took form. When I returned to my desk, I did a little figuring, and remarked to the man across from me, Ralph Sogard, that I thought a piloted airplane could be built weighing only 70 pounds was possible. Ralph was rather a sarcastic individual anyway, and he scoffed at the idea, remarking to the man next to me, Karl Strom, that I must be a little bit nuts (or words to that effect) to believe such an outrageous thing. That did it! It really stirred me into action. Also, it was the only time I ever discussed the idea with the group of four at our four table desk arrangement (the other member of the goup was Bell Whitehead). One of the first things I did was to construct, of balsa, a simple truss that I tested to determine the allowable stress to be used in the rib design. Then, I actually built all the wing ribs for the highly tapered wing and stored them until we came to San Diego.

The discrepancy between the write-up and the factual details has never been much of an issue with me, and still isn't, but I know that you are very good about getting the facts straight for the record. Your WeeBee booklet was a very well done and thorough.

Again, thanks Bill for a very fine presentation of our Bee activities, it was a real joy to re-live those days.

Yours,

Ken Coward

Wee Bee

Late 1946 — Concept Discussions — Shortly after the close of World War II a group of aerodynamicists at the Boeing Company in Seattle, Washington held lunch hour discussions asking the question "How small can you make a piloted aircraft?" Ken S. Coward was one of these aerodynamicists. Coward conceived a design that would be constructed of balsa wood, have a weight empty of 70 pounds, use a 6 horse power motor, and have a top speed of 65 mph. (See Attachment A) (A)

See correction 5/15/92

Sept. 1947 — Coward Moves To San Diego — Ken Coward and his wife Betty move to San Diego from Seattle. Ken starts work at Consolidated Vultee Aircraft Corporation in the Flight Research Department where he meets Bill Chana, Karl Montijo, Tom Bossart and A.B."Mandy" Mandeville.

Jan. 1948 — Design Started — Coward and Chana begin discussions of a small airplane project and decide to build an all-metal version of the balsa wood design that Coward had started in Seattle. Early concepts had a single landing gear wheel in the fuselage (See Attachment B). A conventional two wheel landing gear was finally selected. (B)

Feb. 1948 — Construction Started — With sissors in one hand and war surplus aluminum in the other, Coward, Chana and Montijo start cutting out wing and tail ribs. Larger sheets of aluminum are cut and bent using a large hand operated shear and brake in the Pacific Beach garage of Tom Bossart's father. Several small parts are made by Mandeville in his garage.

March 1948 — Mission Beach Shop — The fabrication and assembly of the major components continues in a rented Mission Beach garage. This was a dirt floor one car garage attached to a main automobile repair shop at 3779 Mission Blvd. The location was chosen because of its proximity to Coward's and Chana's homes, its very low rent ($10 per month), and the ready supply of compressed air to be used for riveting.

March 27/28 1948 — First News Articles — The first news break appeared in the Saturday TRIBUNE SUN and the Sunday SAN DIEGO UNION on March 27 and 28th. Pictures of Chana, Coward and Montijo are shown with the completed Wee Bee wing (See Attachment C). Tail surfaces are partially completed at this time and work has begun on fuselage construction. Coward says the airplane may be called the "Pee Wee" for its small size. The name "Wee Bee" was finally chosen by Betty Coward as more representative of the airplane's small size and the high pitch buzzing sound to be expected from its high RPM propeller. (C)

June 1948 — Move To Gillespie Field — The major components of the airplane are taken to Gillespie Field in El Cajon, CA for completion, final assembly and engine installation and checkout. Space is rented ($10 per month) from Bill Bouck using a portion of his hanger and shop. Jim Wilder, a West Coast Representative of Aircooled Motors, Inc., joins Coward, Chana and Montijo to assemble and supervise the running of the 18 horse power Kiekhaefer O-45-1 target drone engine. A few engine parts were obtained from Pete Nagy and other parts were received from the Navy target drone facility at Border Field near San Ysidro, CA (the very Southwest corner of the United States).

July 1948 — First Engine Runs — The first engine runs were made with a 36 inch diameter target drone propeller. All work at Gillespie Field was performed on the week ends because Coward and Chana were Convair Flight Test Engineers at the time assigned to the Convair XC-99, World's Largest Airplane and the XF-92A, World's first 60° Piloted and powered delta wing airplane which kept them busy during the week in San Diego, at Moffett Field, and at Muroc AFB (now Edwards AFB). Low speed movement of the airplane on the ramp was conducted by Chana, Coward, Montijo and Wilder.

August 1948 — First Taxi Tests — Application was made to the CAA (now FAA) for the aircraft's Airworthiness Certificate on August 1, 1948. The CAA office under the direction of Richard Bowers and Deputy Harold Darling authorized taxi tests. With a new 42 inch diameter Sensenich propeller installed numerous taxi tests on the runways of Gillespie Field were conducted by Chana and Montijo in August. The airplane at this time had a conventional two wheel landing gear with a steel leaf tail skid. In this configuration the airplane had "poor directional control, power off, and a very strong ground looping tendency." Maximum speed reached was approximately 20 mph as measured by a pacing automobile.

Aug.29 1948 — Tail Wheel Installed — Taxi tests were conducted on this date with a steerable tail wheel installed (See Attachment D). This configuration gave "good directional control at all speeds, but did not eliminate the ground looping tendency." Maximum speed reached was approximately 45 mph. Although the tail was light at these high speeds full nose down elevator would not raise the tail wheel off the ground. These were sunrise operations prior to normal aircraft activities on Gillespie Field. There was no FAA control tower on the field. (D)

Sept.4 1948 — Tricycle Landing Gear Installed — The Labor Day weekend taxi tests with the tail wheel indicated an immediate need to change to a tricycle landing gear. Within two weekends of work the main gear was moved aft and a steerable nose wheel was installed. There were no operative brakes on the aircraft in either this or the previous landing gear configurations.

Sept.26 1948 A.M. — Extended Taxi Tests — Chana and Montijo conducted numerous taxi tests determining wing flap effectiveness, elevator effectiveness, rudder and aileron effectiveness, power plant operation, etc.

Sept.26 1948 P.M. — First Time Airborne A news article dated October 3, 1948 reports that Chana makes the first hop of the Wee Bee to about 4 foot height (See Attachment E). The actual hop is estimated by Coward, Montijo and Wilder to be 1 to 2 feet in height and about 75 feet long. Chana was a private pilot at the time with approximately 160 hours flying time in light aircraft. The monocoque main landing gear strut near the axle required some riveting repair following landing. (E)

Oct.10 Thru Nov.5 1948 — First Runway Flights In Ground Effect Karl Montijo who weighed 190 pounds makes a large number of runway flights up to 4 to 6 feet in height. This was the highest attainable altitude at the weight being flown. The CAA issued the Wee Bee's Airworthiness Certificate on October 14, 1948. Over 100 runway flights were made by Montijo testing various wing flap settings, several wing incidence angles, and the incidence angle of the horizontal stabilizer was changed during this time period. Montijo was a World War II B-29 instructor pilot with over 1,000 hours of flight experience in small and large military aircraft.

Nov.13 Nov.14 1948 — First Runway Flights Out Of Ground Effect Bill Bouck, an experienced pilot with over 6,000 hours flight time in many different types of aircraft and who weighed only 140 pounds was asked, and he volunteered, to do runway flights out of ground effect in preparation for forthcoming newsreel demonstration flights. Several practice flights were made up to an altitude of 30 feet with moderate banks to left and right. With the 50 pound reduction in pilot's weight (approximately a 13% decrease in the airplane's gross weight) the Wee Bee was capable with its 18 horse power engine of flying out of ground effect. (See Attachment F). (F)

Nov.20 1948 — First Runway Flights For The Newsreels On this date pilot Bill Bouck made several flights down and up the runway to altitudes of 25 to 30 feet for the newsreel cameras and for the LIFE magazine photographer Peter Stackpole. A story for LIFE magazine was written by and submitted to LIFE by San Diego Radio and TV Newscaster, Harold Keen.

Nov.27 & Early December 1948 — More Runway Flights Karl Montijo continues making numerous runway flights to 5 foot heights at Gillespie Field evaluating the flight characteristics of the airplane. Approximately 400 runway flights were made in the life of the Wee Bee, mostly by Karl Montijo. Meticulous records were kept of all taxi runs and runway flights.

Mid & Late Dec. 1948 — 30 Horse Power Engine Installed The Wee Bee's 18 horse power Kiekhaefer engine is replaced with a 30 horse power Kiekhaefer O-45-35 target drone engine obtained from the Navy target drone headquarters at Santa Ana, CA (dirigible hangers). A sympathetic naval officer "loans" a complete engine to Bill Chana.

Dec.20 1948 — Nation's Smallest Airplane On this date LIFE magazine has a one page spread on "Air Scooter-Nation's Smallest Airplane flies with a pilot on it but not in it." The LIFE article errors when it states that the "Wee Bee takes off on first flight at El Cajon, Calif...." This was not the airplane's first flight nor were the flights on November 13 and 14th the first flights of the Wee Bee (See Attachment G). (G)

Jan.10 1949 — Move to Brown Field At the request of the CAA the Wee Bee flight operations were moved from Gillespie Field to Brown Field south of Chula Vista, CA. This move was required by the CAA for any flights within or outside the airport traffic pattern. Enroute to Brown Field the airplane was taken to the Convair flight line on Lindbergh Field to be photographed next to the USAF XC-99, World's Largest Airplane (See Attachment H). (H)

Jan.16 1949 — First Public Demonstration Flights Karl Montijo makes several flights to 6 foot heights at the "First Annual Sky Rodeo" held at Brown Field on this date (See Attachment I). Bill Bouck was asked if he would like to make these flights, but he requested compensation. Since payment for these demonstration flights was to be only $150.00, and since $220.00 out-of-pocket money had been spent by Coward on the entire Wee Bee project to date including garage and hanger rent, it was decided that Montijo would do the piloting. (I)

Feb. 1949 — Drag And Weight Reduction Several cleanup changes were made to the airplane in an attempt to reduce drag. Karl Montijo went on a diet. The wing flaps were locked in the ½ down position and the control mechanism was removed to save weight. Runway flights out of ground effect were made at Brown Field by pilot Montijo.

Mar.12 1949 — Flight No. 1 The first traffic pattern flight (See Attachment J) was made on this date by Karl Montijo. One complete wide circuit of the field using a right hand traffic pattern (required by the CAA to stay clear of buildings on the south side of the field) was made reaching a maximum altitude of 150 feet above the runway level. Time in the air was just under 10 minutes and the maximum speed reached was 70 mph indicated. The flight was witnessed from the 6,000 foot runway at Brown Field by Chana and his wife Norine and Coward and his wife Betty. (See Attachment J) (J)

Mar.15 1949 — Fuselage Model Tests Realizing that more had to be done to reduce the drag of the airplane, Coward and Chana conduct fuselage drag tests in the stiff but consistant breezes on the dry lake at Muroc AFB (now Edwards AFB) using a 3/20 scale balsa wood model (See Attachment K). The effect of installing a pilot's canopy was also tested. The results of this test indicated that a change in wing incidence was in order. (K)

Apr.29 1949 — Flight No. 2 A traffic pattern flight reaching a maximum altitude of 400 feet was made by Montijo. A 5% reduction in gross weight was made over the previous flight. The angle of incidence of the wing was changed from 5° to 19°, the nose gear was shortened, a new Sensenich 44-BJ-23 propeller was installed, and a new wing to fuselage and engine to fuel tank fairing was made. Flight time was 10 minutes. The day before this flight Chana leaves for Fort Worth, Texas on a four month flight test assignment on the Convair B-36D program.

Apr.30 1949 — Flight No. 3 Demonstration A traffic pattern and figure eight flight over the field was flown for Mr. H. W. Atkins, Publicity Director for the London Daily Express newspaper (See Attachment L). Time in the air was 10 minutes and maximum altitude was 500 feet. Karl Montijo was the pilot for this demonstration flight. On the strength of this demonstration a contract was signed to demonstrate the Wee Bee at the Gatwick Air Pageant south of London, England. (L)

June 4 1949 — Flight No. 4 To check out several major changes listed below and for pilot proficiency, Montijo makes a 7 minute traffic pattern flight prior to the airplane being boxed for shipment to Gatwick, England. A maximum altitude of 400 feet was reached when one spark plug wire failed cutting the power available in half. The engine continued to run smoothly at half power. Prior to this flight wing tips were added changing the wing span from 15 to 18 feet, the instrument panel was moved from a horizontal position to a more vertical position normal to the pilots line of sight. The wing flaps were fixed in the up position, and the wheel brakes were connected and made operative.

Late June 1949 — Wee Bee Makes Trip To England By Train & Boat A special box was made to ship the Wee Bee over seas for its flight demonstrations at the Gatwick Air Pageant. The box was built at no cost to the designers and builders of the Wee Bee by the Nelson-Kelley Co. on Lindbergh Field (See Attachment M). Coward and Montijo fly to England. All expenses for shipping the box, transportation for Coward and Montijo are paid by the London Daily Express Newspaper Group. (M)

July 20 1949 — Flight No. 5 Checkout Montijo makes a 6 minute traffic pattern flight up to 400 feet altitude at the Gatwick Air Terminal south of London, England. There are no prepared runways at Gatwick at this time so a landing on rough ground damages the main gear and nose gear slightly. Working through the night Coward and Montijo with the aide of several British mechanics make the necessary repairs.

July 23 1949 — Flight No. 6 Demonstration Montijo makes a 6 minute flight in front of the grand stand at the Gatwick Air Pageant. Maximum altitude flown was 250 feet. Other demonstration flights were scheduled for subsequent days at Gatwick and at Belfast, Ireland but were cancelled due to rain. The Wee Bee was then returned to its shipping box and sent to Cleveland, Ohio for demonstration flights at the Cleveland National Air Races. Coward and Montijo returned to San Diego. Chana and Montijo go to Cleveland, Ohio and are assisted by Chana's brother Howard from Chicago and Jim Wilder who arrives from the East coast.

Sept.4 1949 — Flight No.7 Demonstration Montijo makes a 7 minute demonstration flight in front of the grand stand at the Cleveland National Air Races. Maximum altitude reached was 200 feet and maximum indicated airspeed was 85 mph. LOOK magazine takes photographs and interviews Chana, Montijo and Wilder for a forthcoming article. This was Montijo's last Wee Bee flight. The Wee Bee was then returned to its box (now called its hanger) and shipped back to San Diego to Gibbs Airport(now Montgomery Field). All shipping and travel expenses were payed for by the Cleveland National Air Races Association.

Dec.20 1949 — World's Smallest Airplane LOOK magazine has a full page spread on the Wee Bee accrediting it the "World's Smallest Airplane." Small enough to lift a man or to be lifted by one. Jim Wilder shows his strength by lifting the Wee Bee off the ground by himself (See Attachment N). (N)

Dec.31 1949 — Flight No. 8 Chana makes a 5 minute flight in the traffic pattern at Gibbs Airport. Maximum altitude was 200 feet and maximum speed was 65 mph indicated. Many major changes were made prior to this flight. A larger windshield was installed, the hard rubber nose wheel was replaced with an air tire, the ground turning radius was increased from 10 to 20 feet, a spring steel main landing gear was installed, the wing incidence was changed from 19° to 12°, and the aileron throw was changed from 20/20 to 15/15 degrees.

Jan.28 1950 — Flight No. 9 Test & Photography Chana makes a 14 minute flight reaching a maximum altitude of 2,000 feet pressure altitude (1,600 feet AGL). (See Attachment O). On this flight and on flights 10, 11 and 12 a Piper J-3 Cub Chase Plane was flow by either Spencer Nelson or Ray Keough from Gibbs Flying Service. Both became Senior PSA Captains. Nelson was on board PSA Flight 182 that killed all on board. This Wee Bee flight was made specifically to obtain test data and in-flight photos. The measured takeoff run was 700 feet. The measured rate of climb at 60 mph indicated airspeed using full throttle was 250 feet per minute. The takeoff gross weight was 410 lbs. A minimum in-flight airspeed of 45 mph indicated and a maximum indicated airspeed of 95 mph (descending) was reached. Static Longitudinal Stability was positive, but elevator forces were very light. Wings level yawed flight to 1/4 rudder throw at 60 mph was tested. A 2 "G" accelerated pull up was made. A very hard landing was made, but there was no damage to the airplane. Prior to this flight metal leading edges were added to the propeller, an accelerometer and elevator position indicator were added, and the nose wheel strut was shortened 2 inches. (O)

March 11 1950 — Flight No. 10 Test & Photography Chana makes a 13 minute flight reaching a maximum pressure altitude of 1,300 feet. Photographs were taken from the chase plane. A level flight full throttle speed run at the maximum altitude reached was flown in formation with the Chase Plane. The Wee Bee was slightly faster than the J-3 Cub with its two occupants. The stabilized level flight speed at full throttle was 72 mph indicated ; however, a check with the chase plane indicates the Wee Bee's top speed was closer to 82 mph. The takeoff and landing on this flight was made in a 10 to 12 mph 3/4 right cross wind. The previously experienced high sensitivity of elevator control during takeoff and landing was greatly reduced. Prior to this flight elevator throw was reduced from 30/20 to 20/10 degrees. The accelerometer was removed and a rate of climb indicator was installed in its place prior to this flight.

March 12 1950 — Flight No. 11 For The Newsreels — Chana makes a 14 minute flight primarily for the newsreel camera men on the ground and in the chase plane. The best climb speed was determined to be 55 mph indicated airspeed and the maximum rate of climb observed at 1,000 feet pressure altitude was 375 feet per minute. Level flight speed was measured at three different throttle settings.

March 12 1950 — Flight No. 12 For The Newsreels — Chana makes a second flight of the day for the newsreels. Flight duration was 12 minutes. (See Attachment P). The newsreel cameras in the chase plane were jammed on the previous flight. A part throttle level flight speed check was made. A low level pass over the runway was made for the benefit of the still and movie cameras on the ground. The top speed reached during the runway high speed pass was 90 mph indicated (estimated to be 105 mph actual airspeed). The reason all flights were kept to about 12 to 14 minutes flight duration was due to the aircraft's low fuel capacity which was an "unsure" 1-1/2 gallons. The fuel tank was an old war surplus pressure oil tank and it was difficult to determine how much fuel was actually in the tank; however, the amount of fuel added each time was known. (P)

April 20 1950 — Flight No. 13 For The U.S.A.F. — Chana makes final flight (See Attachment Q) for a duration of 8 minutes. This was a demonstration flight viewed from the ground by Lt.Col. Jackson USAF Los Angeles Procurement Division. Sixty degree banked turns and figure eights were made and a high speed pass down the runway concluded the demonstration. The flight was also viewed by CAA Representatives Richard Bowers and Harold Darling. Ken Coward was present at all flights (except No. 7). Ken would conduct the pre-flight inspection and adjust the carburetor from lean to best mixture prior to release of brakes for taxiing out. Montijo was present for all of Chana's flights (See Attachment R for Wee Bee 3-view at this final stage of development). (Q) (R)

1950 Thru 1963 — Static Displays — The Wee Bee box used to transport the aircraft from San Diego to England, Ireland, Cleveland and home again was used as the aircraft's hanger during this period of time. On many occasions during this period the Wee Bee went on static display at air shows at Montgomery Field, Brown Field and the Miramar Naval Air Station. Coward and Chana formed Beecraft, Inc. (later changed to Bee Aviation Associates, Inc.) and in this period designed, built, tested and obtained a CAA Approved Type Certificate (ATC 4A11) on a single place high wing "V" tail airplane they called the "Honey Bee." After flying for over 20 years the Honey Bee was retired to the Experimental Aircraft Association Museum in Hales Corners, Wisconsin. In its later years the Honey Bee was owned by Walter Mooney one of its builders. Towards the latter end of this time period Bee Aviation designed and built a four place "V" tail low wing airplane called the "Queen Bee." After some 50 hours of flight test the Queen Bee,along with the Wee Bee,was retired to the newly established San Diego Aero-Space Museum on invitation of the museum's founder and first President, Preston M. "Sandy" Fleet.

Feb.15 1963 — San Diego Aero-Space Museum — When the San Diego Aero-Space Museum opened its doors on this date, the Wee Bee was one of five aircraft on display - the others being the Coward/Chana Queen Bee, two Montgomery gliders and the 1911 Curtiss A-1 reproduction around which the museum was formed. On several occasions the Wee Bee was taken from the museum for static display in promotion of the museum. It has been said that the unique Wee Bee with its prone pilot position, its major appearances in two separate newsreel releases approximately a year and a half apart, and the extensive coverage in World wide aviation periodicals plus the full page spread in LIFE and LOOK magazines was an inspiration to many youth and young adults creating a movement towards their future involvement in aviation. The Wee Bee's exposure to the public took place 3 to 4 years prior to the formation of the now very successful Experimental Aircraft Association (EAA).

Feb.22 1978 — San Diego Aero-Space Museum Fire — The original Wee Bee with the Queen Bee and approximately 45 other originals, replicas, reproductions and restored aircraft were completely destroyed in the disasterous museum fire on this date. Many records, negatives, photographs, etc. on the Wee Bee and Queen Bee were also destroyed by the fire.

April 1978 — The Wee Bee Replica — Before the ashes had cooled from the disasterous fire of February 22nd, aviation enthusiasts rallied to the cause of starting a new collection and getting the San Diego Aero-Space Museum open once more in a new building. One of the first projects undertaken was the building of a"flyable" replica of the Wee Bee. It was to be a "replica" in that three of its original builders - Coward, Chana and Montijo - would direct and contribute to the building of the new Wee Bee. The three original builders with 22 volunteers began building the replica in April 1978 and it was completed in December. In the tradition of the original Wee Bee, the replica was placed on static display in various locations in San Diego promoting the rebuilding of the museum (See Attachment S & T). (S&T)

July 1978 — San Diego Aero-Space Museum Opening — The new San Diego Aero-Space Museum opened its doors in July 1980 and the Wee Bee replica now takes the place of the original. (See Attachment U). (U)

Ken S. Coward - Wee Bee Designer & Builder

William F. Chana - Wee Bee Builder & Pilot

Karl H. Montijo - Wee Bee Builder & Pilot

James Wilder - Wee Bee Propulsion

William C. Bouck - Wee Bee Pilot

Attachment "A"

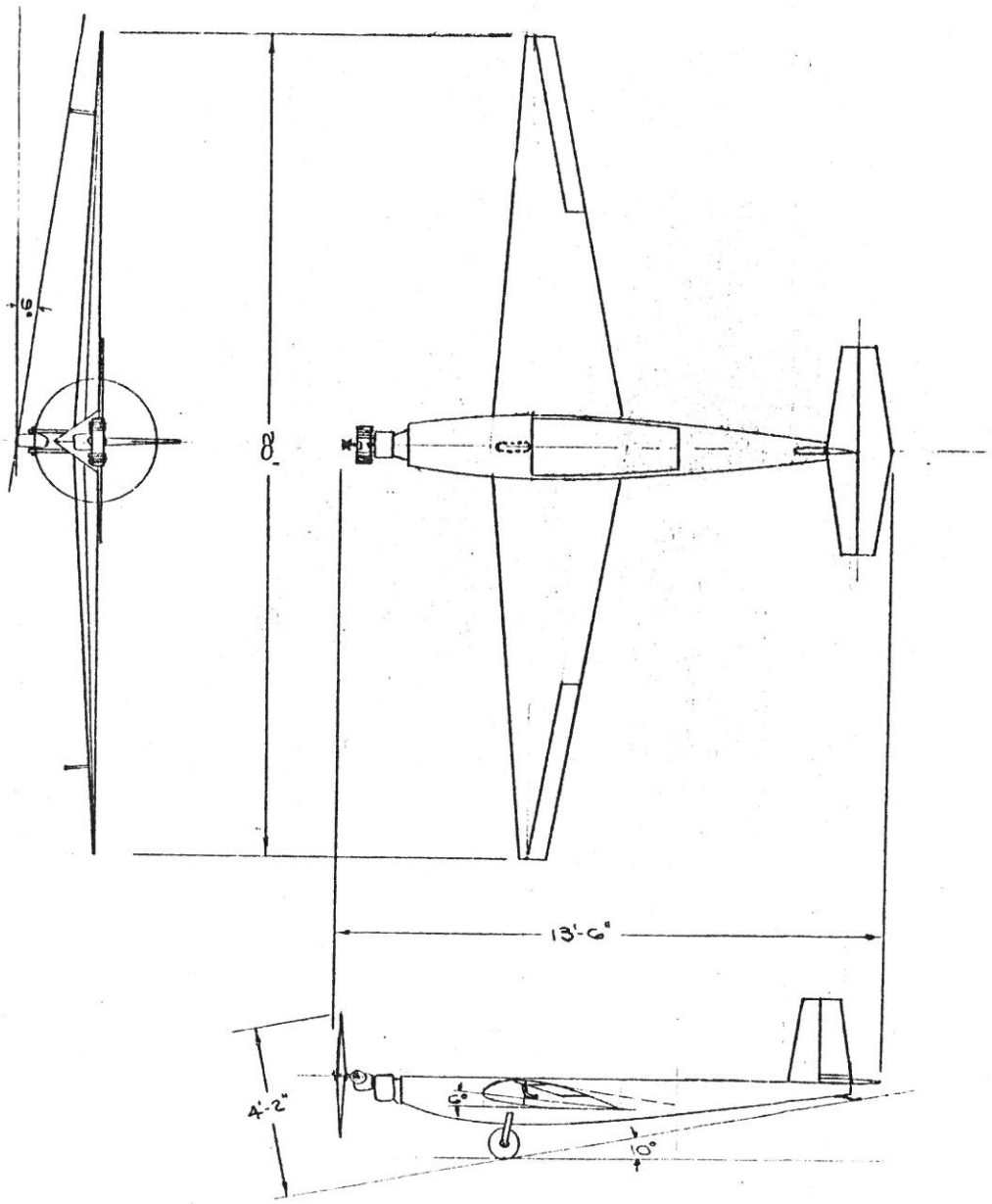

SCALE 1" = 3'

WEIGHTS

W.E. -	70*
U.L. -	190
GROSS WT. -	260*

AREA

WING (INCL AIL.)	40 FT.²
ELEVATOR	3 FT.²
STABILIZER	3 FT.²
TOTAL HORIZ AREA	6 FT.²
TOTAL VERT. AREA	2.5 FT.²
AILERONS (TOTAL)	4.3 FT.²

ASPECT RATIO

WING -	10
HORIZ. TAIL -	4.2
VERT. TAIL -	2.5

ANGULAR MOVEMENT OF CONTROL SURFACES

	UP	DOWN
AILERON	30°	30°
ELEVATOR	30°	20°
RUDDER	R 30°	L 30°

AIRFOIL SECTIONS

	ROOT	TIP
WING	NACA 4318	4309
STAB-ELEV	" 0015	0009

POWER - 6 BHP

TAPER RATIO

WING -	5:1
STAB-ELEV. -	2:1

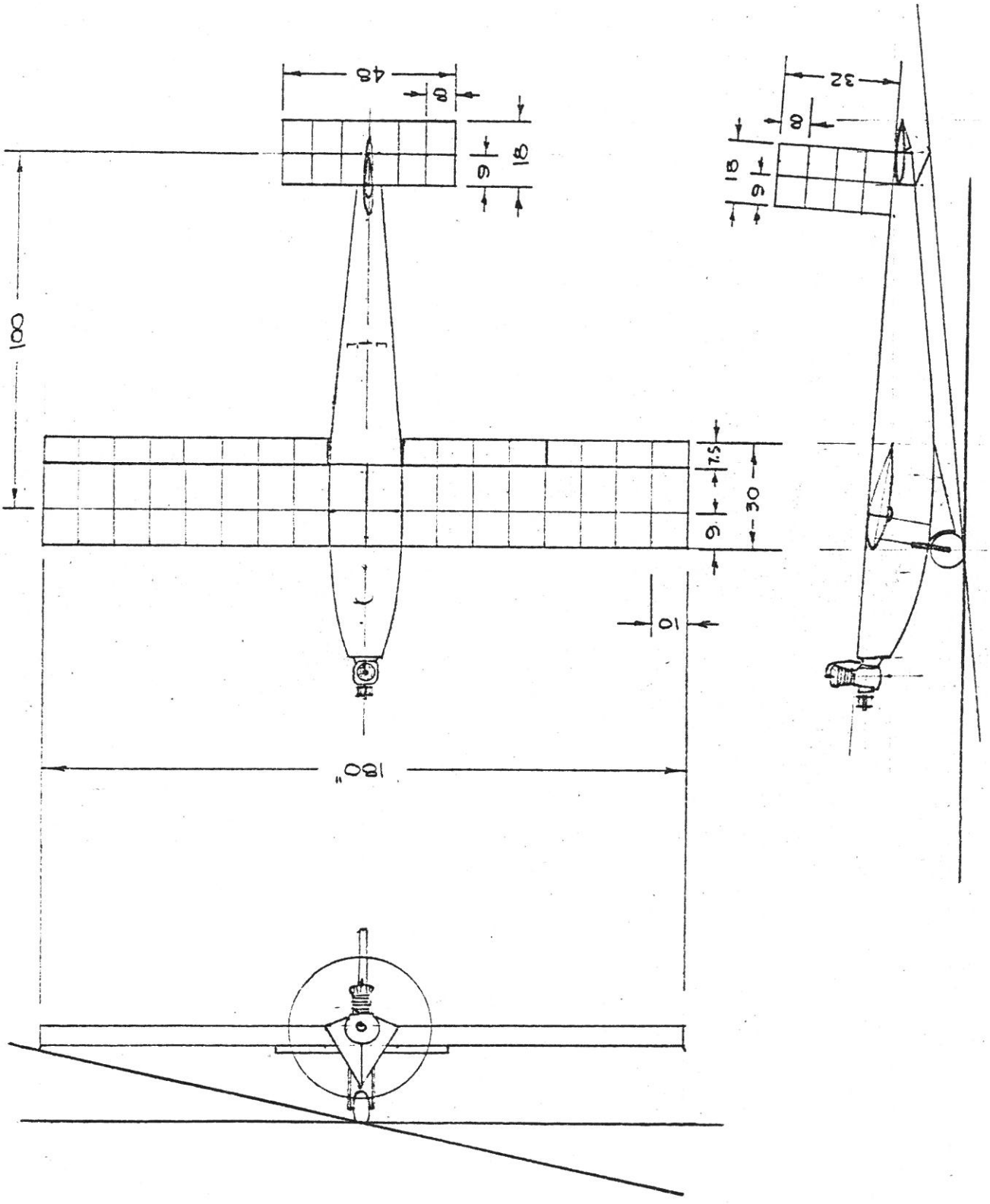

Attachment "B"

☆ ASSOCIATED PRESS ☆ UNITED PRESS ☆ INTERNATIONAL NEWS ☆

THE TRIBUNE-SUN

THE SAN DIEGO UNION: SUNDAY MORNING, MARCH 28, 1948

3 San Diegans Set Test Hops On Tiny Craft

Three young San Diego flight research engineers are building what they describe as the world's smallest piloted airplane and they hope to begin flight tests in two months, probably at Gillespie Field.

Builders of the all-metal plane, which will weigh only 135 pounds empty, are Kenneth S. Coward, 27, of 725 Capistrano Pl.; Karl H. Montijo, 23, of 4325½ Georgia St., and William F. Chana, 27, of 4595 Pendleton St. All are employed by Consolidated Vultee Aircraft Corp. and work on their midget plane evenings and week-ends in a garage at 3779 Mission Blvd.

WING COMPLETED

They started construction the first of the year and have completed the 85-pound wing, the ailerons, stabilizer and elevator. Work on the body will start soon.

The pilot must lie down to fly the unconventional craft, which will be only 3 feet high. Its gross weight can be only 350 pounds.

No name has been chosen for the tiny craft, but it might be "Pee Wee," Coward said. The boys don't want a serious name because their "project" is primarily for their own recreation. But they expect it to fly and are not overlooking possibilities for production, which the plane's simple design would permit.

TOP SPEED 115 MILES

Instead of being coldly statistical, the design information is astonishing. The plane's span will be 15 feet; length, 13 feet; maximum speed, 115 miles an hour; cruising speed, 100 miles an hour; rate of climb, 700 feet a minute; best rate-of-climb speed, 70 miles an hour; landing speed, with flaps at 50 degrees, 40 miles an hour. Its range will be 200 miles; endurance from normal fuel capacity, 2 hours.

For power, the young engineers will rely on a Nelson model H-44 with 25 brake horsepower, or either of two Kiekhaeffer models, the 0-45-1 or 0-45-35.

35-Pound Wing for World's Smallest Plane

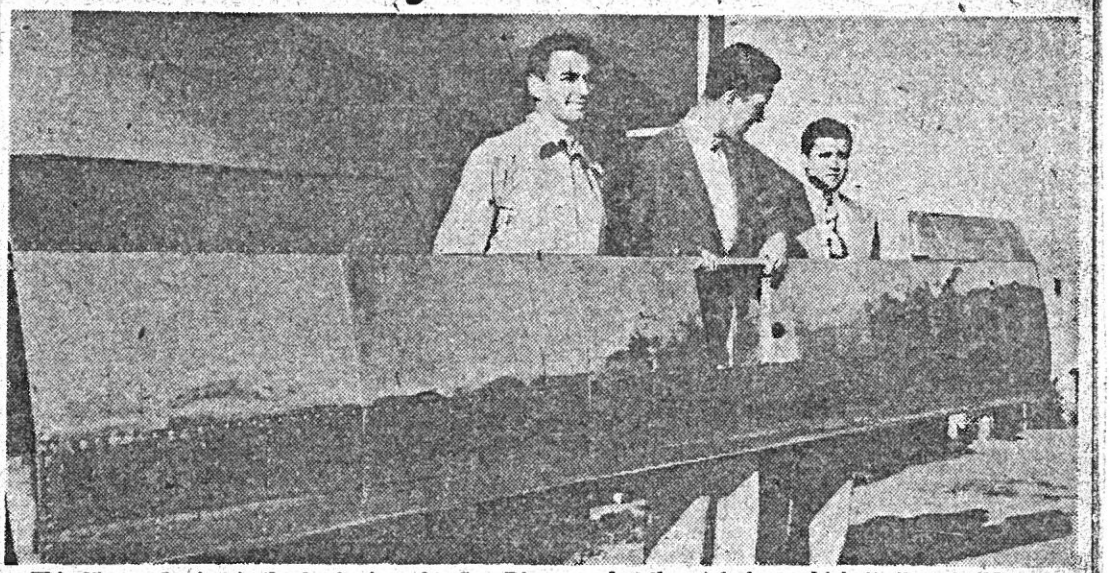

This 35-pound wing is the beginning of a San Die go-made, all-metal plane which, its three builders say, will be the world's smallest. Kenneth S. Coward, ce nter, easily holds it while William F. Chana, left, and Karl H. Montijo think about the 135-pound plane's t est flights, which may start in two months. Pilot will lie prone in tiny plane, which will be only 3 feet high.

WORKER ON XC-99

Chana, with Convair 8 years, has the world's largest land-based plane for his job and the smallest as a hobby. He's a flight observer in the crew of the XC-99 transport. Montijo, San Diegan 7 years, was a B-17 and B-29 pilot instructor in the recent war. Coward, who came to San Diego 6 months ago, formerly was with Boeing, Fairchild, Waco and other plane-makers.

Coward said the design of their small plane was conceived in 1945 when someone asked, "How small can you make a piloted airplane?" He commented that the military is experimenting with high-speed fighter aircraft, flown from the prone position to enable the pilot to withstand stronger pull-outs and turns.

Coward said an all-metal construction encouraged a low production cost for the first model as well as for commercial or military uses.

The "Pee Wee" will have a simple monowheel landing gear and outrigger wheels.

Attachment "C"

Attachment "D"

Midget Plane Still Has 'Bugs'

First taxiing tests of the WeeBee, 150-pound airplane built in San Diego, showed the midget craft "has a great deal of maneuverability, but also a few bugs," Ken Coward, designer, said yesterday after the end of initial trials along Gillespie Field runways at El Cajon.

Coward said the plane's first flight may be delayed a month because of the "bugs" and "also because Jim Wilder, who installed the motor for us, has to go east for a month. We don't want to take the WeeBee in the air without him to test the engine."

Karl H. Montijo and William F. Channa, who helped build "the world's smallest airplane" in a Mission Beach garage, took turns at the controls yesterday during first taxi trials.

WeeBee Needs Landing Gear

A tricycle landing gear has been prescribed to solve ground-handling troubles of the WeeBee, 150-pound airplane designed by Ken Coward and tested in fast taxi runs last week-end, Coward said yesterday.

"This change should not only make our little airplane easier to handle, but it will improve ground visibility," Coward said. "The new landing gear will include a steerable nose wheel."

Change in the gear has added 2 weeks to the time before Coward expects to get the plane into the air. Designing and installing the new gear will take about 4 weeks, he said.

Week-end taxi tests were made by Karl H. Montijo and William F. Channa, who helped build the plane, believed to be the world's smallest. Trials were made at Gillespie Field where the plane was assembled.

SUNDAY MORNING, OCT. 3, 1948

WEEBEE GETS OFF FIELD

The WeeBee, San Diego-built "world's smallest airplane," has hopped at 4-foot heights during taxi tests but no real flight has been made yet, Kenneth Coward, designer, said yesterday.

Built in a Mission Beach garage, the tiny craft is 13 feet long, has a wing span of 15 feet and weighs 150 pounds. Actual flight tests are expected in 2 or 3 weeks, according to Coward.

"We are right in the middle of taxi tests with new landing gear," Coward reported. "The WeeBee taxi-hopped the length of its runway at Gillespie Field, El Cajon, but we can't consider that it was in flight."

William F. Chana, pilot and co-builder, who attained the 4-foot "altitude" in the WeeBee, also has flown in the world's largest land-based plane, the XC-99. The WeeBee's builders are employed by Consolidated-Vultee Aircraft Corp., which built the XC-99, but the tiny craft represents an independent project.

Karl H. Montijo and Jim Wilder are associated with Coward and Chana in the WeeBee development. Wilder made all of the power plant installations.

The midget craft, atop which the pilot lies prone, is on display at the Science and Industry Show in Balboa Park's Federal Building.

Attachment "E"

The San Diego Union
San Diego 12, Calif.
6a Sunday, Nov. 21, 1948

Test Pilot Takes Tiny Plane on Demonstration Hops

Bill Bouck, test pilot, takes the Wee-Bee, believed to be the world smallest man-carrying airplane, off the runway at Gillespie Field. In yesterday's tests, all flights were made with flaps in down position.

Wee-Bee Makes Trial Flights Successfully

EL CAJON, Nov. 20 (Special)—Demonstration test flights of the Wee-Bee, a plane so small its pilot can pick it up, were successfully conducted for press and newsreel cameramen at Gillespie Airport here today.

The tiny "motor scooter of the air" was only allowed to fly under full flaps about 25 feet in the air. The pilot, Bill Bouck, banked it in some gentle turns and brought it back to earth.

After making several exhibition flights, Bouck said the plane handled like other light planes and that he easily could have flown it higher. He said he had flown it enough so that he was getting the "feel" of the plane.

FLYING NOT DIFFICULT

Ken Coward, one of the Wee-Bee's designers, explained that learning to fly the plane offers no special problem other than for the pilot to become used to flying while lying on his stomach. The rudder is operated by foot pedals. Ailerons and elevators are operated by conventional control stick at the pilot's right hand. Flaps and throttle are at his left.

The plane is 15 feet from wing tip to wing tip and from propeller to rudder. It weighs 170 pounds. The only man beside Bouck to have flown it is another of its developers, Karl Montijo, who weighs 20 pounds more than the plane. With parachute, he weighs 40 pounds more.

ALTITUDE LIMITED

According to Coward, flying the Wee-Bee to its full altitude may depend on the designers' obtaining a 30-horsepower engine such as the Navy uses in its target drone planes. Yesterday's flight was made with an 18½ horsepower engine, which is not expected to develop a top speed of more than 75 miles an hour.

Until now, the plane has not been flown, more than about 60 miles an hour because it has been kept near the ground with flaps down. Its landing speed, with flaps, is about the same as conventional light planes, 45 miles an hour.

The plane has been developed as an avocation by Coward, Montijo, Bill Chana and Jim Wilder, all of whom work in the aircraft industry.

Attachment "F"

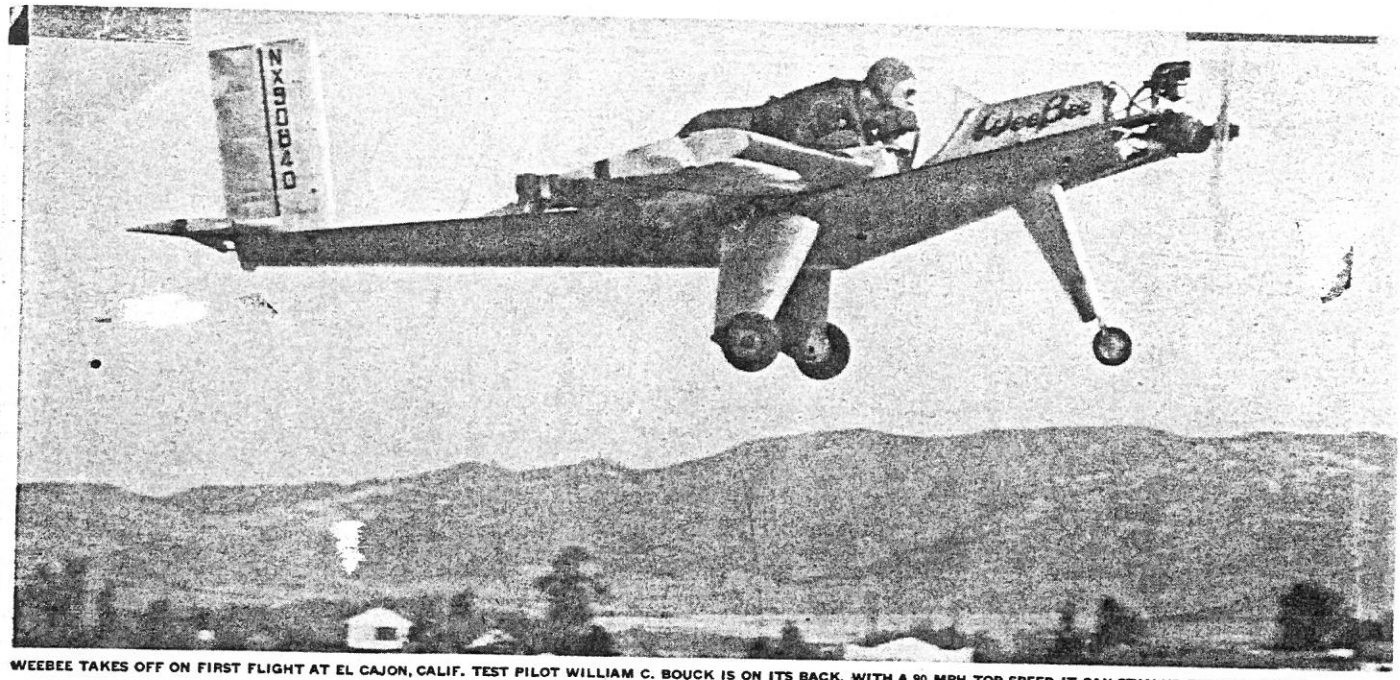

WEEBEE TAKES OFF ON FIRST FLIGHT AT EL CAJON, CALIF. TEST PILOT WILLIAM C. BOUCK IS ON ITS BACK. WITH A 90 MPH TOP SPEED IT CAN STAY UP FOR ONE HOUR

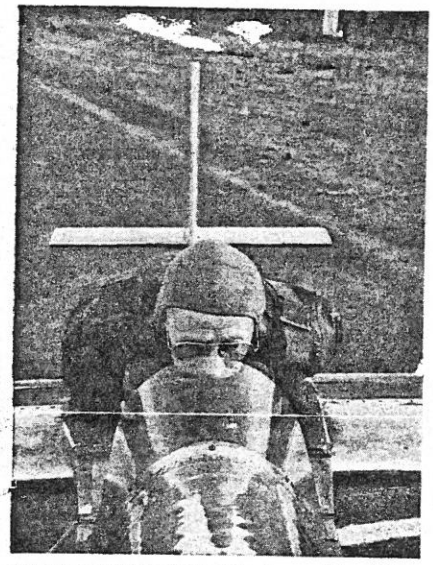

PILOT'S CHIN rests on soft rubber cushion. Others (*below*) support his body. Windshield protects his face.

AIR SCOOTER

Nation's smallest airplane flies with a pilot on it but not in it

How small can an airplane get? To answer this question three Consolidated Vultee Aircraft Corp. engineers built the tiny 18½ horsepower experimental machine shown here for $300. Called the WeeBee, it is probably the smallest piloted airplane ever to fly. It weighs only 170 pounds and has no room inside it for the pilot. He lies on top of it and to manipulate stick, flaps and throttle, his hands reach into the "cockpit" through two holes in the aluminum skin. His feet (*right*) rest on the rudder pedals half way down the fuselage. The WeeBee first flew last month when the test pilot (*above*) skimmed it 20 feet above the runway during taxi tests. Built originally for fun, the WeeBee has stirred up so much interest that its makers now hope to produce it in quantity to sell for less than $1,000 as an economical motor scooter of the air.

PILOT'S FEET rest on rudder pedals with the toes in fuselage. Pedals work like those of regular plane.

PILOT BOUCK MOUNTS WEEBEE. WAITING TO STRAP HIM ON ARE JAMES WILDER (LEFT) WHO INSTALLED ENGINE AND WILLIAM CHANA, ONE OF THE DESIGNERS

LIFE - Dec. 20, 1948

Attachment "G"

CONVAIRIETY

SAN DIEGO, CALIF. DAINGERFIELD, TEX. FT. WORTH, TEX.

Wednesday, January 19, 1949

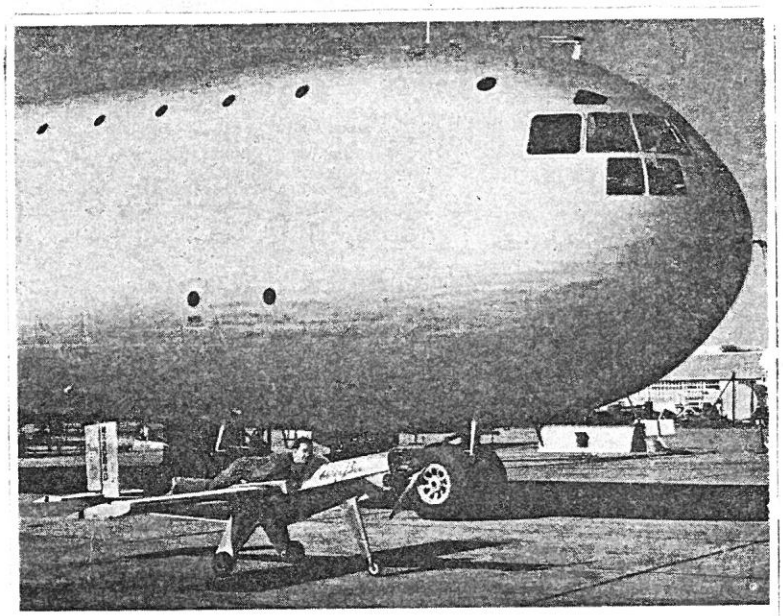

BIGGEST AND SMALLEST—Here is the Wee Bee, smallest piloted plane, alongside Convair XC-99, world's largest land plane, taken at Lindbergh Field, SD. Wee Bee is a private venture of Ken Coward of Convair SD. It has flown but thus far pilots have refrained from taking it more than few feet above ground. XC-99, slated for first test flight since landing gear was changed, was prevented from flying last week by weather.

Attachment "H"

CONVAIRIETY

CONVAIRIETY

Wednesday, Jan. 5, 1949

Wee Bee Hopes To Pose With XC-99

Efforts were under way this week to bring the Wee Bee to Lindbergh Field to have its picture taken alongside the XC-99.

Ken Coward, Convair SD flight research analyst, who sponsors the tiny ship as a private enterprise, hoped pictures could be arranged this week. Meanwhile, the ship is scheduled for appearance at a Brown Field air show Jan. 16 where it is slated to make practice hops a few feet off the ground. The plane has not yet been taken to any real height.

The San Diego Union
San Diego 12, Calif.
a-4 Monday, Jan. 17, 1949

Stunting Pilots Prove Thrilling For Thousands

Thousands lined the south side of Brown Field on the Otay Mesa yesterday afternoon for a taste of the calculated insanity of stunt airplane pilots. No one was killed, but there were—to the crowd—some near misses.

The airshow, called "Air Thrills of 1949," was co-sponsored by the San Diego Junior Chamber of Commerce and Briese Flying Service. Ray Morse directed the event.

The WeeBee, tiny experimental ship, made several passes at a take-off but stayed within 10 feet of the ground. Built by several San Diego aeronautical engineers in their spare time, the tiny plane is flown by a pilot strapped face down on top of the fuselage.

The San Diego Union
San Diego 12, Calif
a-16 Sunday, Jan. 2, 1949

First Airshow At Brown Field Set for Jan. 16

The first annual airshow, "Air Thrills of 1949," to be co-sponsored by the San Diego Junior Chamber of Commerce and the Breise Flying Service, will be held at Brown Field, Otay Mesa, Jan. 16, Bob Hale, chairman of the Junior Chamber's Aviation Committee, announced yesterday.

The "sky rodeo," under the direction of Ray Morse, is one of a series of events planned to put San Diego and its airport facilities in the front rank nationally with regard to civilian aviation, Hale said.

Through publicity gained by such events, it is hoped that Brown Field may be selected as the start of the Bendix Cross-Country Classic, top feature of the Cleveland National Air Races, later in the year.

EVENTS ARRANGED

routines. Another feature will be the first sustained public flight of San Diego's own "WeeBee," world's smallest airplane, which has attracted national attention and was the recent feature of a Life Magazine picture-story.

The San Diego Union
San Diego 12, Calif
Sunday, Jan. 9, 1949
b-3

BRIESE FLYING SERVICE AND JUNIOR CHAMBER OF COMMERCE
PRESENT

FIRST ANNUAL SKYRODEO

"AIR THRILLS of '49"

FEATURING

SAMMY MASON and his HOLLYWOOD HAWKS

STARS OF NATIONAL AIR RACES

• • •

FIRST PUBLIC DEMONSTRATION OF 400 M. P. H.

SUB-SONIC-GLIDER

LOW ALTITUDE PRECISIONISTS

FIRST OPEN FLIGHT - WORLD'S SMALLEST AIRPLANE • • •
SAN DIEGO'S OWN *WEE BEE!*

BROWN FIELD

SUNDAY - JANUARY - 16

GATES OPEN 11:30 a.m. FIRST EVENT 1:30 p.m.

PARKING FOR 5000 AUTOS....

FLIGHT OF THE WEE BEE

The world's smallest piloted plane!! Desined and built here in San Diego by KEN COWARD & ASSOCIATES. Soo-oooo tiny that the pilot lays on TOP OF THE FUSELAGE!!! You've seen it in the newsreels, papers, LIFE & FLYING. Now see it in action in it's forst open flight!!

Attachment "I"

The San Diego Union
San Diego 12, Calif.
a-4 Sunday, Mar. 13, 1949 ★

Tiny Plane Makes Extended Flight

The Wee Bee, world's smallest man-carrying airplane, was flown through the traffic pattern at Brown Field late yesterday afternoon for its first extended flight.

It was flown at a level of 200 feet above the field by Karl Montijo, one of its builders and a former instructor on B-29s. He said the plane handled normally. It climbed at an air speed of 55 miles an hour and flew 75 miles an hour on the level.

The tiny metal ship is 15 feet long, has a wingspan of 15 feet and a net weight of 170 pounds.

THE TRIBUNE-SUN
a-6 San Diego 12, Calif.
Mon., March 14, 1949 X

Smallest Plane Makes First Extended Flight

The world's smallest plane, the Wee Bee, flew the Brown Field traffic pattern late yesterday on its first extended flight.

Flown at a 200-foot level by Karl Montijo, one of the builders, he said it handled "normally." The plane flew 75 miles per hour, he said. Fifteen feet long, and with a wingspan of 15 feet, the tiny metal plane weighs 170 pounds.

Attachment "J"

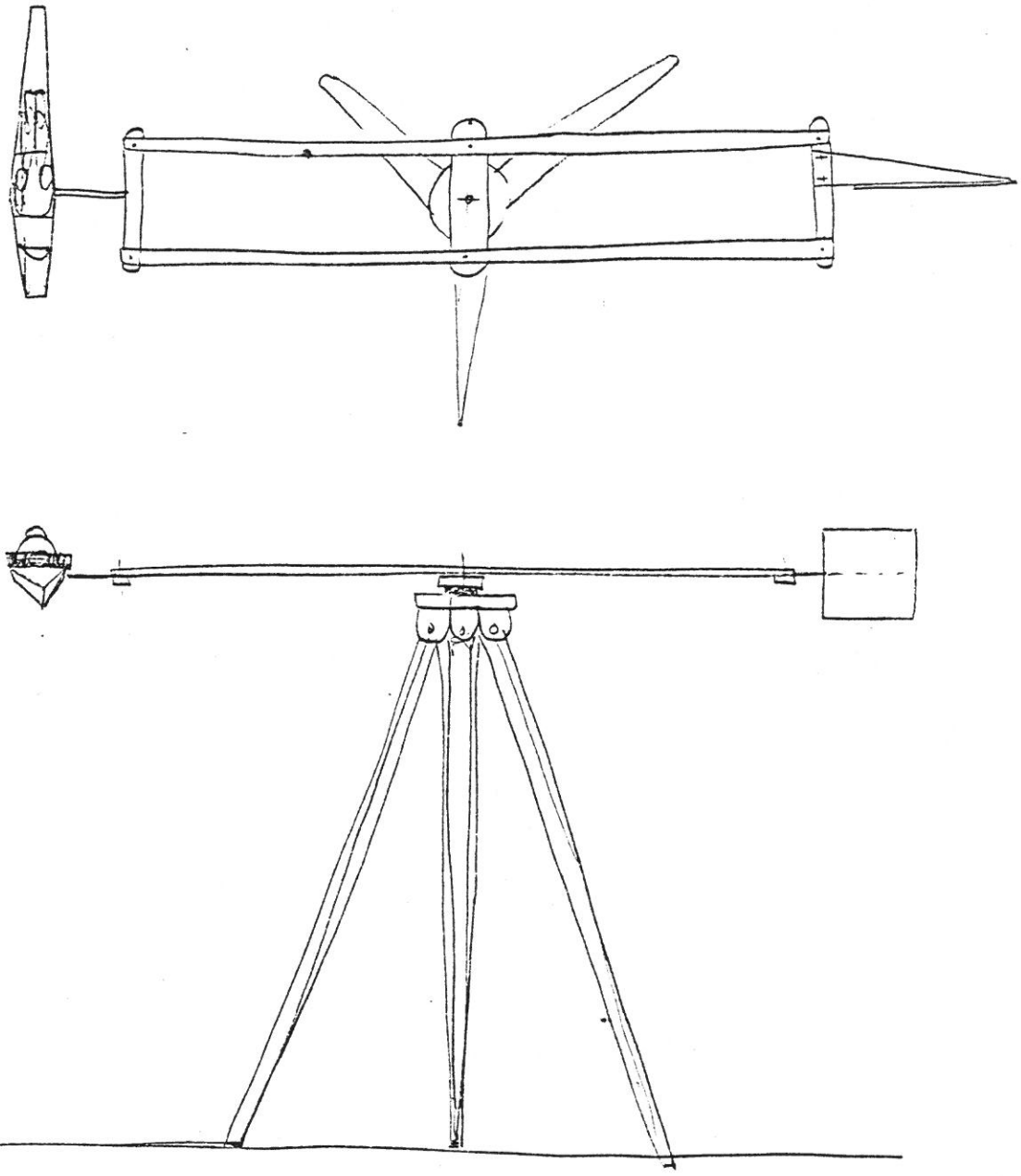

Attachment "K"

The San Diego Union
San Diego 12, Calif.
★ Mon., May 2, 1949 a-3

Ken Coward, left, designer of Tiny WeeBee plane, goes over contract with H. W. Atkins, publicity director of London Daily Express, for Coward's taking the plane to England and Ireland for air pageants.

WEEBEE GOING ABROAD

Tiny Plane Will Make England, Ireland Trips

The WeeBee, world's tiniest airplane developed by Ken Coward and Karl Montijo, will fly in air pageants in England and Ireland in July, the partners announced here yesterday after conferring with H. W. Atkins, publicity director of the London Daily Express. Both men will accompany the plane abroad and Montijo will pilot it in exhibition flights. The first pageant is to be produced by the Daily Express at Gatwick Airport near London on July 23.

Atkins said the newspaper would lease the entire airport for a day. He estimated that about 70 percent of the flying would be done by Royal Air Force planes and visiting military aircraft.

"I saw the WeeBee fly yesterday and I think it will go over well in England," Atkins said. "I feel certain the British people will take to the new conception of prone flight, outside the plane instead of in it. It is an excellent example of ingenuity and enterprize.

The second pageant, on July 30, will be at the Sydenham Airport, Belfast, Ireland. This pageant will be sponsored jointly by the Daily Express and the Royal Air Force Association, Atkins said. The newspaper is sponsoring the trip of the San Diegans to both pageants.

Americans 'Sold Down River,' Briton Asserts

A really big-time promoter, H. W. Atkins, publicity director for the four-million-plus circulation London Daily Express, opined here yesterday that Americans are being "sold down the river" by a lot of people.

"This Mother's Day business," he said. "That's quite a laugh. Another is buying a new car every year. In England our cars go on and on. But the strangest of all are your funeral salesmen. I never thought a funeral could be made so attractive."

Atkins was here to sign up Ken Coward and Karl Montijo for a trip to England this summer to display their WeeBee plane at air pageants produced by his paper.

As for his own country, he said that Britons were getting a bit tired of socialism. "They've found that the Government's taking 45 percent of the income is just the normal thing for a Socialist Government."

Socialized medicine, he said, resulted in some persons getting spare spectacles. "After all—why not when they are free?" So far, he knew of no cases of spare dentures.

Attachment "L"

SAN DIEGO BUSINESS

SAN DIEGO, CALIFORNIA, JUNE, 1949

International Billboard

The WeeBee is now moving across the continent by flat car in this crate on its way to London and other points. Ken. S. Coward, one of the designers and builders, and Carl Montijo, the WeeBee pilot, will follow their homemade plane in order to appear in an aerial pageant at Gatwick Airport, near London, on July 23. They will leave San Diego on July 16. The London Daily Express is sponsoring the show and paid all expenses in connection with the WeeBee appearance. Nelson-Kelley Co., Lindbergh Field, crated the tiny airplane for trans-Atlantic shipment.

Stanley Grove, general manager of the Chamber of Commerce, is shown here pointing to the inscription of the WeeBee crate which will tell the thousands of persons who will see it en route about the position of San Diego in the aviation industry. A number of exhibition flights are planned by Mr. Coward and Mr. Montijo, including another aerial pageant to be held July 30 at Sydenham Airport, Belfast, Ireland. The Daily Express considers the WeeBee an "excellent example of American ingenuity and enterprise" because of its new conception of prone flight, outside the airplane instead of in it.

Attachment "M"

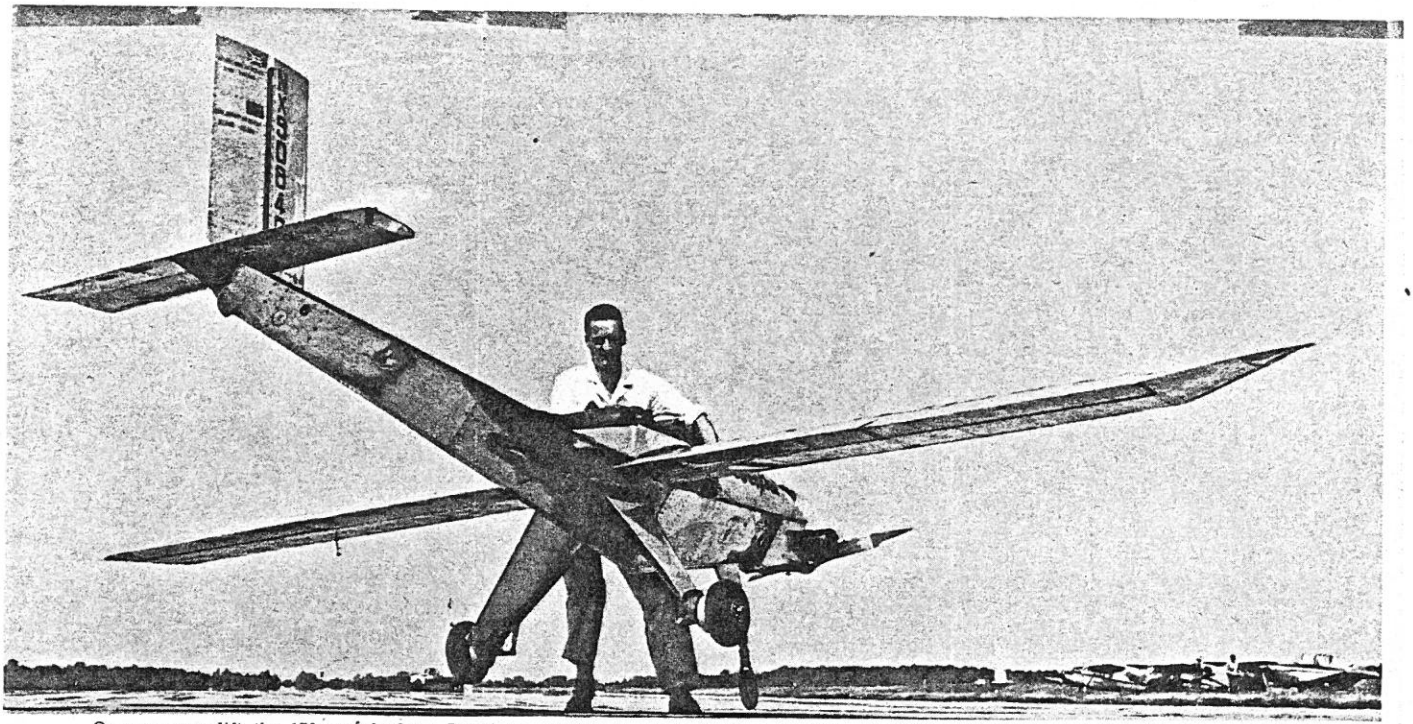

One man can lift the 170-pound plane. Its 28-hp engine can speed it up to 85 mph. Materials cost $300 and it took 800 man-hours to assemble.

Pilot's toes operate the rudder pedals just as in a conventional plane. Stick and throttle are in a small compartment under the pilot's stomach.

World's Smallest Plane

IN a world where planes keep getting bigger, four young California aircraft workers have taken a crack at reversing the trend. They work at Consolidated Vultee, the company that builds giant B-36 superbombers. In their spare time, they've put together a midget they call the *Wee Bee*. It's just big enough to lift a man, or be lifted by one.

To fly *Wee Bee*, pilot must lie on cushions strapped to aluminum fuselage. Chin rest supports pilot's head. A tiny windshield protects his face.

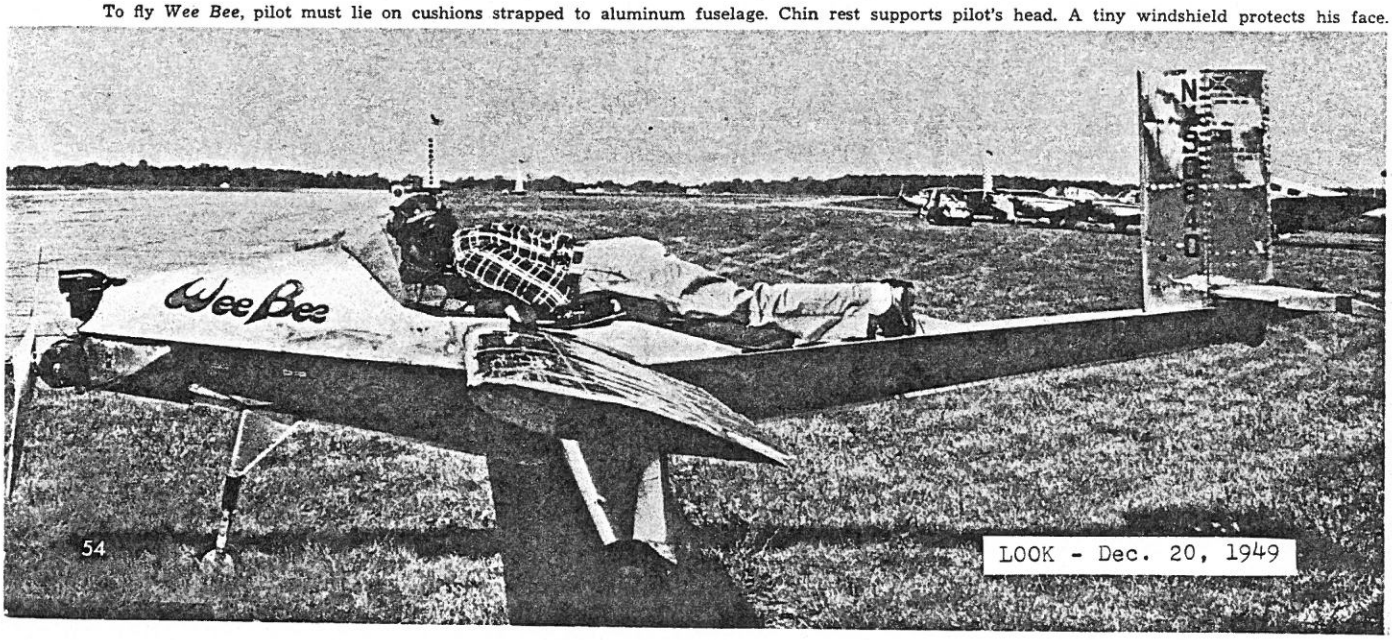

LOOK - Dec. 20, 1949

Attachment "N"

THE SAN DIEGO UNION
a-4 San Diego 12, Calif.
Sun., Mar. 19, 1950 ★★

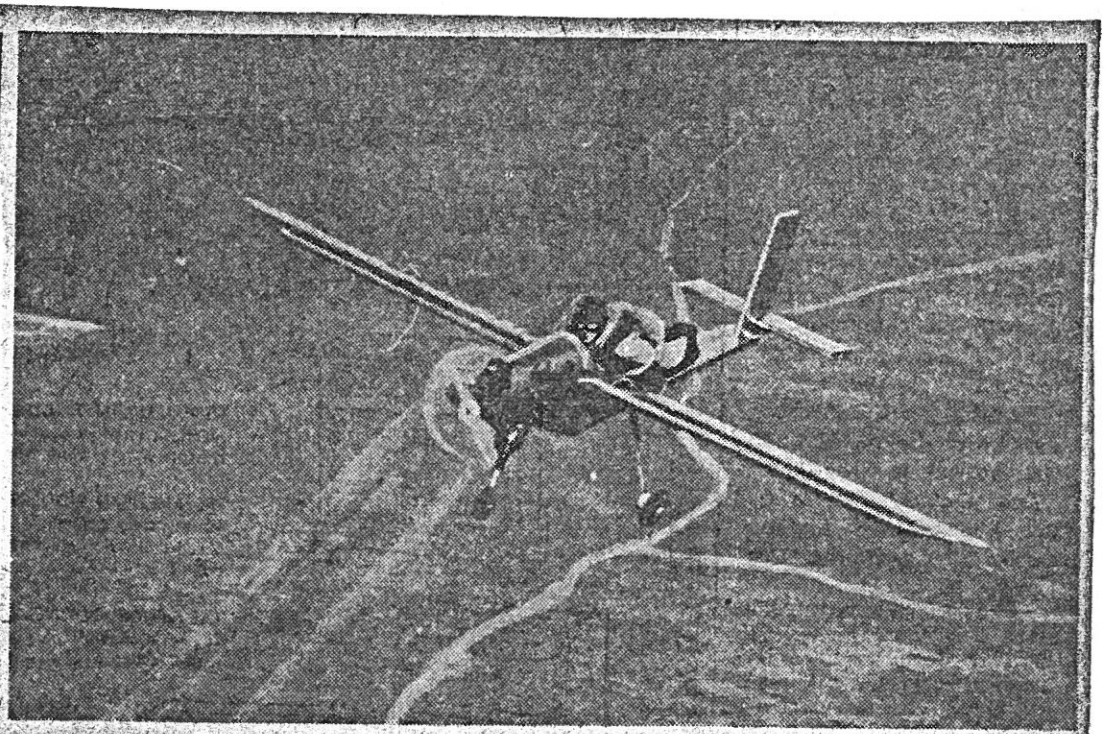

SMALLEST PLANE SOARS 2000 FEET

The San Diego-built Wee Bee, world's smallest airplane, soars over Kearny Mesa at 2000 feet, highest altitude at which it has flown. The pilot, strapped to the top of the fuselage, is William Chana, one of the co-designers of the craft.

Attachment "O"

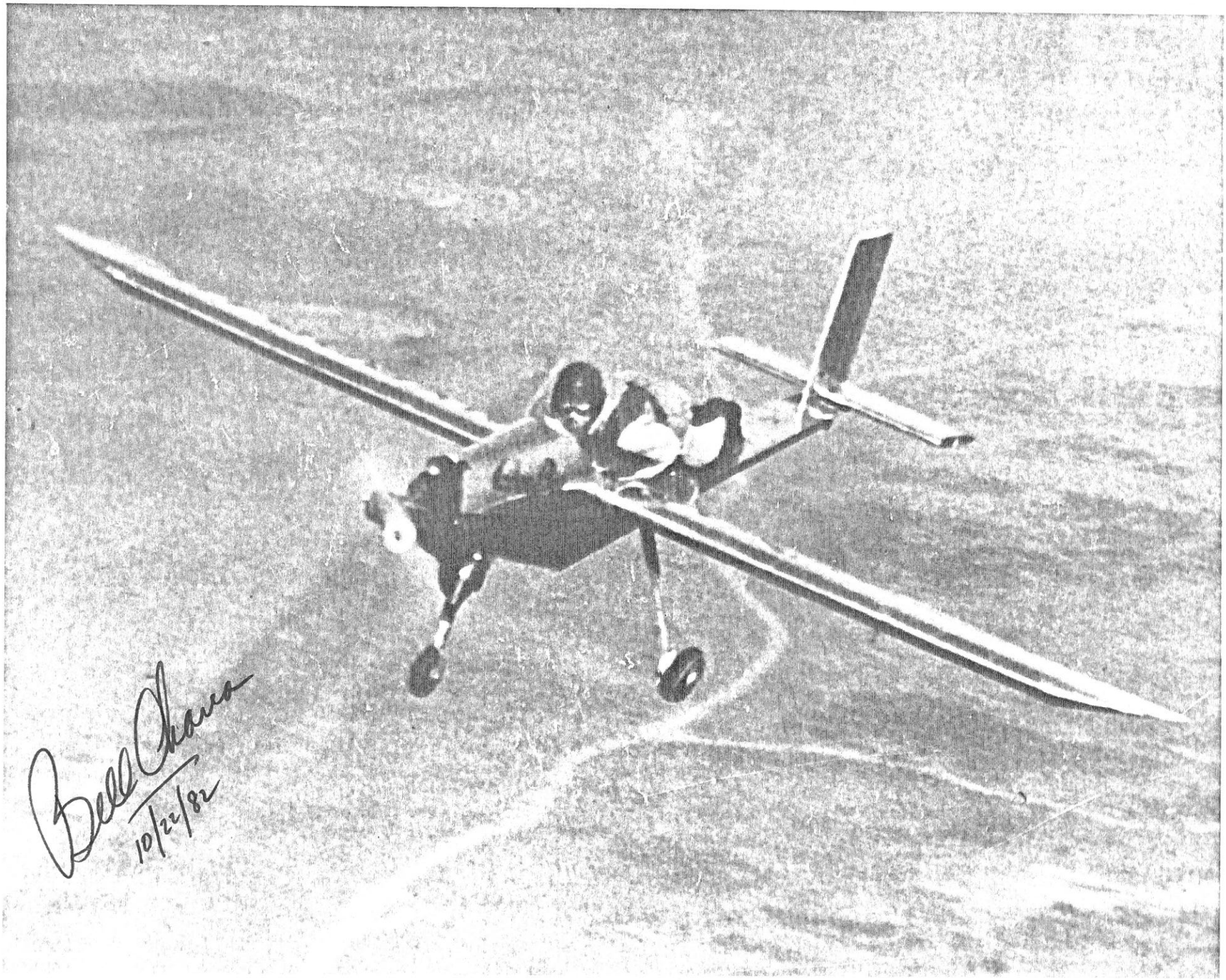

Attachment "O"

Riding Piggy Back on Smallest Plane

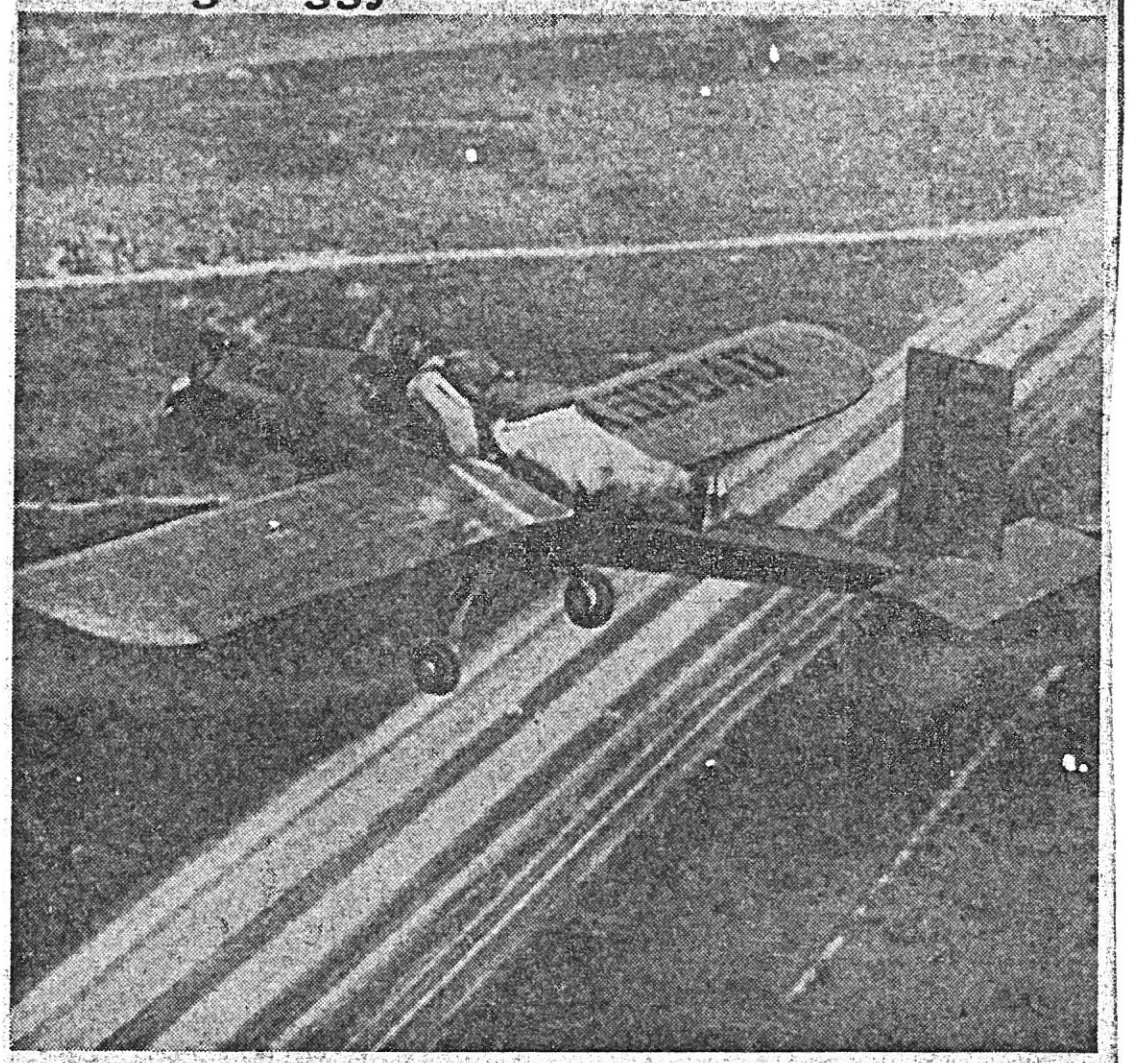

Bill Chana, lying prone along fuselage, pilots the Wee Bee, world's smallest airplane, at 3,000 feet during a test flight at San Diego, Calif. The plane is 15 feet long and has an 18-foot wingspread. It weighs 215 pounds and is controled by foot pedals.

Attachment "P"

SAN DIEGO
DAILY JOURNAL

Page Thirteen Wednesday, April 26, 1950

CROSSTOWN with Neil Morgan

WEDNESDAY WANDERINGS: Another nine-play summer stock season opens at La Jolla Playhouse July 4. Eve Arden is being sought [illegible] star in the opener. That fall [illegible] between 11 p.m. and 11 a.m. against yellow curbs between 6 p.m. and 6 a.m.

An aging member of the Cuyamaca Club was describing a new group called Cigarets Anonymous. "We figure we'll save $75 a year," he said, "and spend it all in a big blow-out drinking Old Fashioneds." . . . Air Force inspectors at Gibbs Airport were impressed by the WeeBee, that tiny craft flown by its San Diego inventors in air shows here and abroad. It carries one man, lying down. Auxiliary equipment for the paratrooper?

SENTINEL

NORTH SHORES SENTINEL

One-Man Plane Demonstrated

The Wee Bee airplane recently went through a demonstration flight for the Air Force at its home field, Gibbs Airport.

The pilot, William Chana, 4595 Pendleton Court, Pacific Beach, reported the flight was made for Lt. Col. Carl Jackson, U.S.A.F., who in turn will submit his report to the Air Materiel Command at Wright-Patterson Air Force Base, Dayton, Ohio.

The Wee Bee was designed and built by Ken S. Coward and Associates, in a Mission Beach garage. It is a prone pilot position airplane, weighing only 210 pounds, and is the only airplane that can lift a man or be lifted by one.

THURSDAY, APRIL 27, 1950

Attachment "Q"

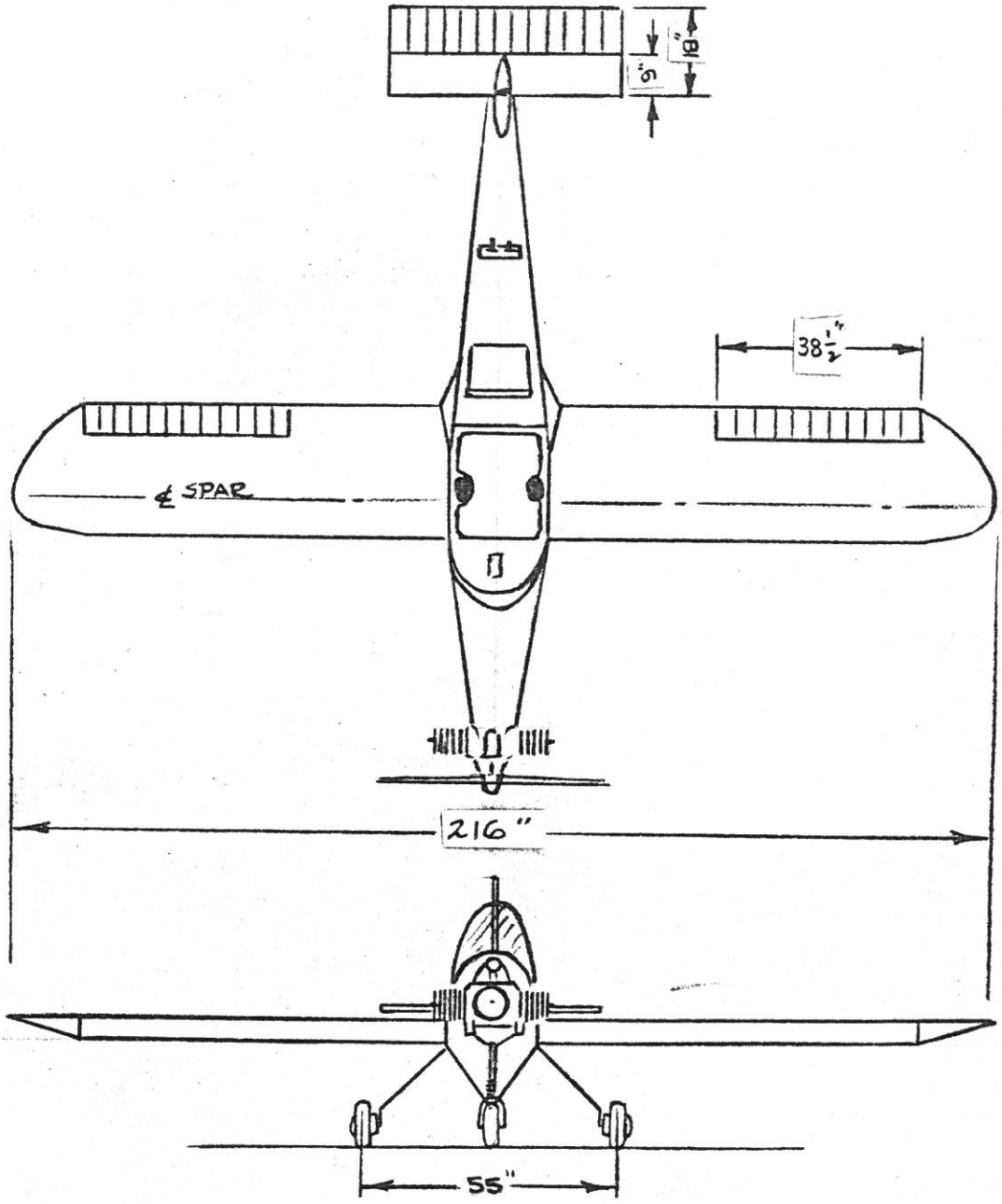

Beecraft ASSOCIATES INC.

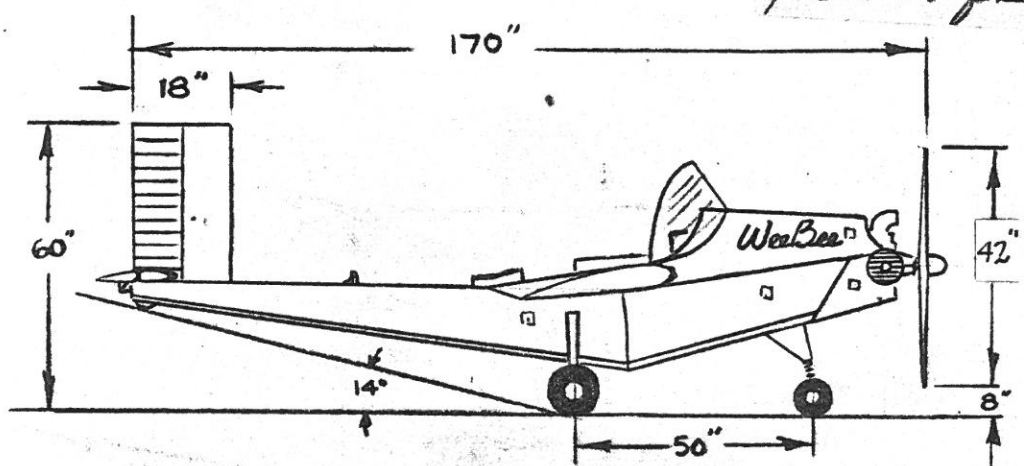

the

WEE BEE

Power..... 28 BHP
Gross Wht..410 Lbs.
Design Criteria:
CAR 03 Nor.Category
Aero Parameters:
Wing Loading.- 9.3 #/ft.
Power Loading- 13.7 #/BHP
Aspect Ratio -7.6
Airfoils:
Wing & Tail 0018 0012-64

DESIGN K Carward DRAWN W Chava DATE 6-1-48

Attachment "R"

Attachment "S"

WEE BEE REPLICA VOLUNTEERS

William F. Chana
Kenneth S. Coward
Karl Montijo
Homer H. Allen
Ralph Borden
Robert Bowen
Annemarie Brennan
Roy F. Christensen
Ralph C. Cole
Frank Cooke
Corky French
Robert L. Fronius
Nick Gaich
Robert E. Harp
Conrad Horine
Wiley Humphrey
Rafael S. Miret
Walter E. Mooney
Martin Palos
Mel Ramos
John H. Retana
Ted Tornesella
Gene Whigham
Al & Olive Kosen

WEE BEE REPLICA UNDER CONSTRUCTION

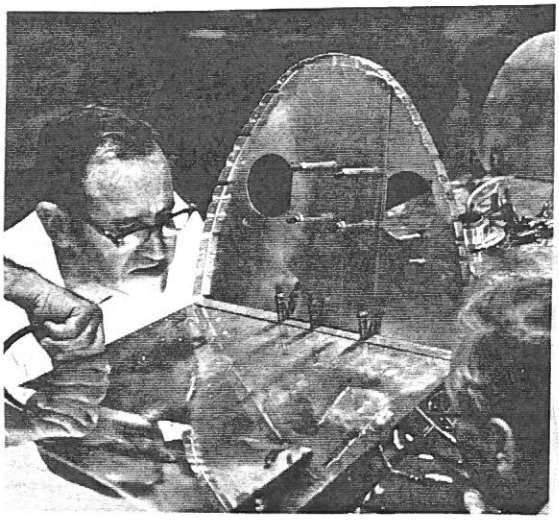

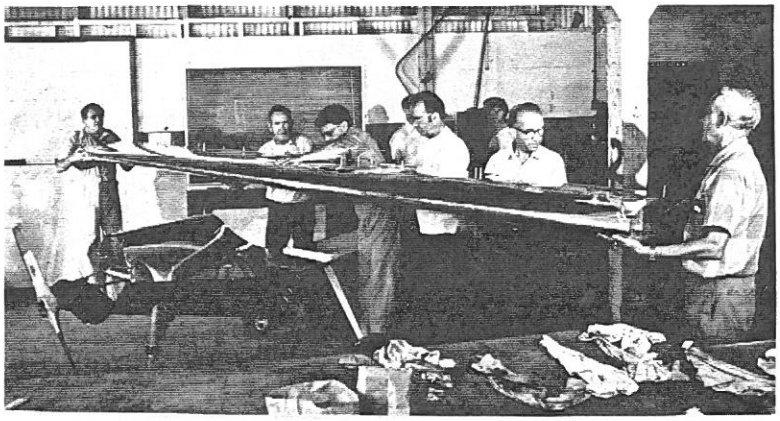

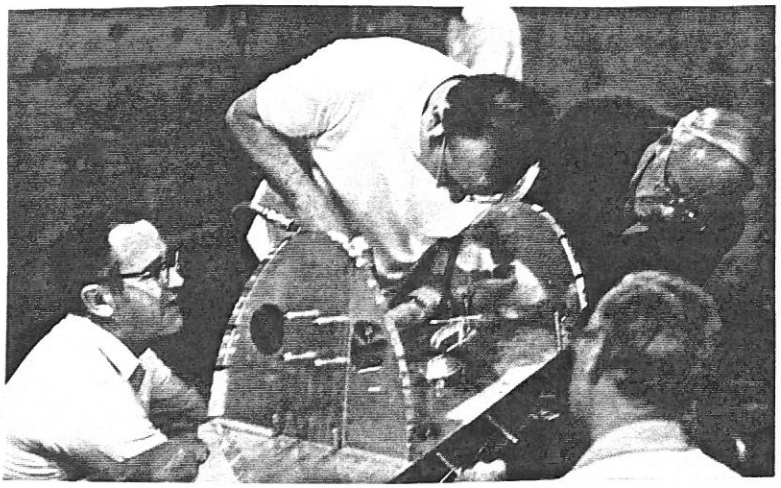

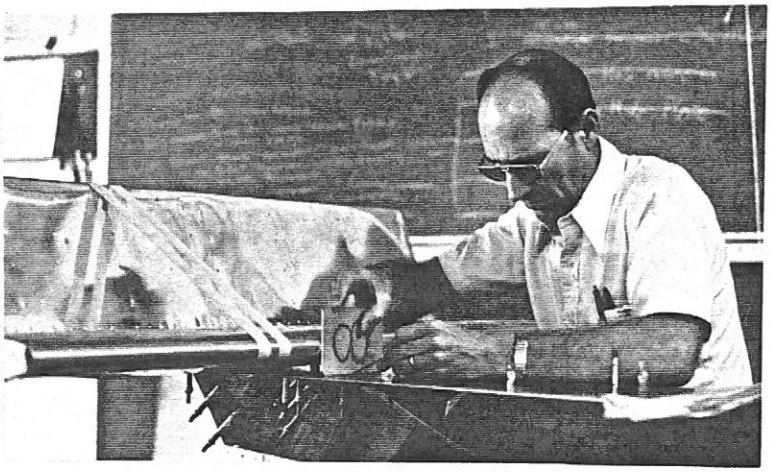

Attachment "T"

1948 ORIGINAL DESIGN - KEN COWARD
1978 REPLICA DRAWINGS - BILL CHANA

Chana 5/1/78

Wee Bee REPLICA

THIS FLYABLE REPLICA WAS BUILT TO REPLACE THE ORIGINAL WEE BEE DESTROYED IN THE SAN DIEGO AERO-SPACE MUSEUM FIRE 2/22/78. THIS REPLICA WAS CONSTRUCTED BY AND UNDER THE DIRECTION OF THE ORIGINAL WEE BEE BUILDERS: BILL CHANA, KEN COWARD & KARL MONTIJO. WITH THE DEDICATED ASSISTANCE OF 22 VOLUNTEERS.

WING	
SPAN	18 FEET (216 INCHES)
CHORD	30 INCHES
AREA	44 SQ. FEET
ASPECT RATIO / WING LOADING	7.65 / 9.3 LBS PER SQ. FT.
AIRFOIL	NACA 0018
HORIZONTAL TAIL	
SPAN	4 FEET (48 INCHES)
CHORD	16 INCHES
AIRFOIL	NACA 0012
VERTICAL TAIL	
HEIGHT - STABIL / RUDDER	32 INCHES / 29 INCHES
CHORD	18 INCHES
AIRFOIL	NACA 0012
POWER	
KIEKAUFER TARGET DRONE	30 BHP @ 4600 RPM
POWER LOADING	13.7 LBS. PER BHP
WEIGHTS	
EMPTY WT.	210 POUNDS
GROSS WT.	410 POUNDS
SPEEDS	
STALL SPEED	45 MPH
TOP SPEED	82 MPH

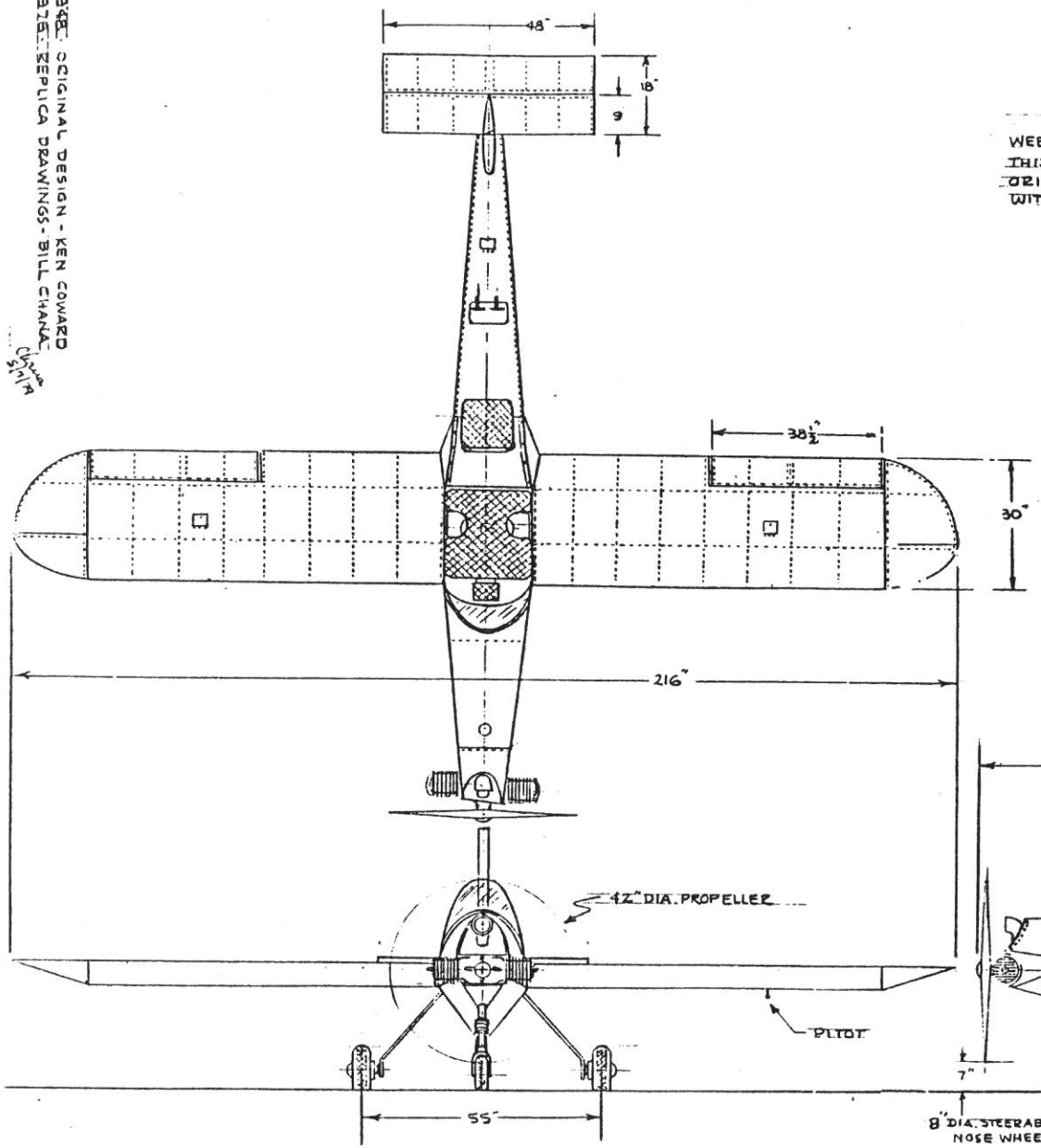

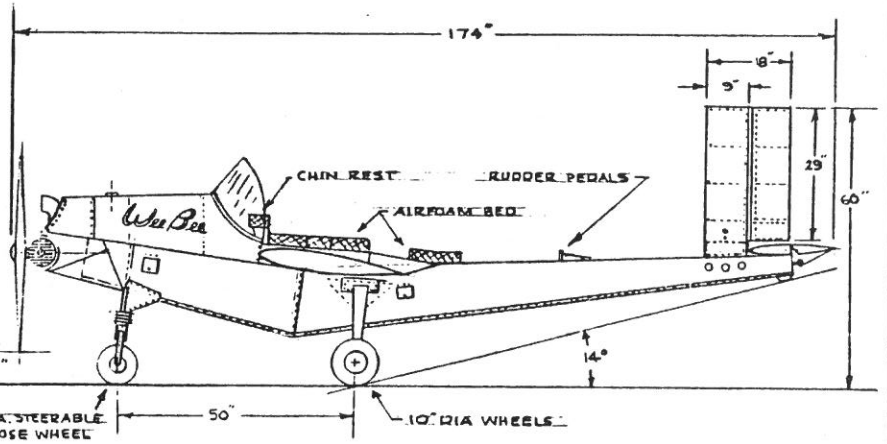

Attachment "U"